1040 CLASSIC ROAD | APEX, NC 27539
P: 866.906.2709 | F: 919.882.1430
www.griffinmotion.com

Precision Linear Motion Platform

FEATURES

- Compact Low-Profile Design
- 50mm Travel
- Zero backlash, precision ground ball screws
- Optical limit switches with home
- Stepper Motor
- Crossed Roller Bearings

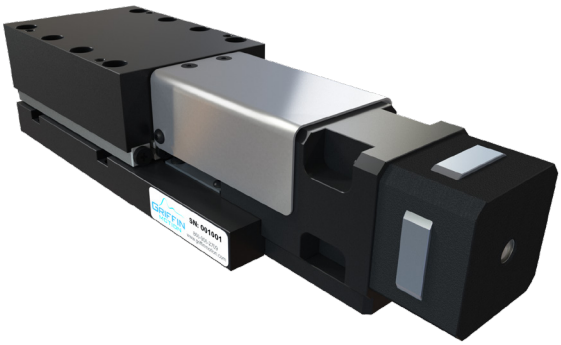

The MCS-BS Series stages are designed for a variety of applications. This compact low profile ball screw stage is built for high duty cycles and long life for laboratory, factory automation and semiconductor processing equipment. This stage has exceptional levels of flatness and straightness. The crossed roller bearings and a precision ground ball screw offer extremely smooth operation and velocity control. The MCS-BS Series stages can be stacked to create X, Y and Z motion. The stage can operate in any orientation and has an optional brake for added safety and the optional tooling plate is easily customized for different mounting options.

1040 CLASSIC ROAD | APEX, NC 27539
P: 866.906.2709 | F: 919.882.1430
www.griffinmotion.com

Product Specifications

Force X (N)	75
Force Y (N)	75
Force Z (N)	75
Flatness (µm)	4
Height (mm)	51
Length (mm)	233
Limit Switches	Yes
Linear Accuracy (µm)	13
Linear Repeatability (µm)	3
Linear Velocity (mm/s)	25
Moment X (N·m)	2
Moment Y (N·m)	2
Moment Z (N·m)	2
Moving Mass X (kg)	0.64
Pitch +/- (arc-sec)	12
Screw Lead (mm)	2
Stage Mass (kg)	1.7
Straigtness (µm)	4
Width (mm)	67
Yaw +/- (arc-sec)	10

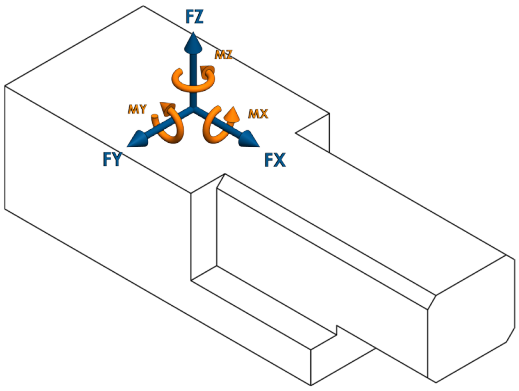

LOAD DIRECTIONS

Part Number Description

MCS	MCS Series
050	50mm Travel
BS	Ball Screw Drive
B	Stepper Motor
N	Limit and Home Switch Only
S	Standard Precision
0	No Additional Options
00	Standard Product (Call for custom)

1040 CLASSIC ROAD | APEX, NC 27539
P: 866.906.2709 | F: 919.882.1430
www.griffinmotion.com

Mechanical Specifications

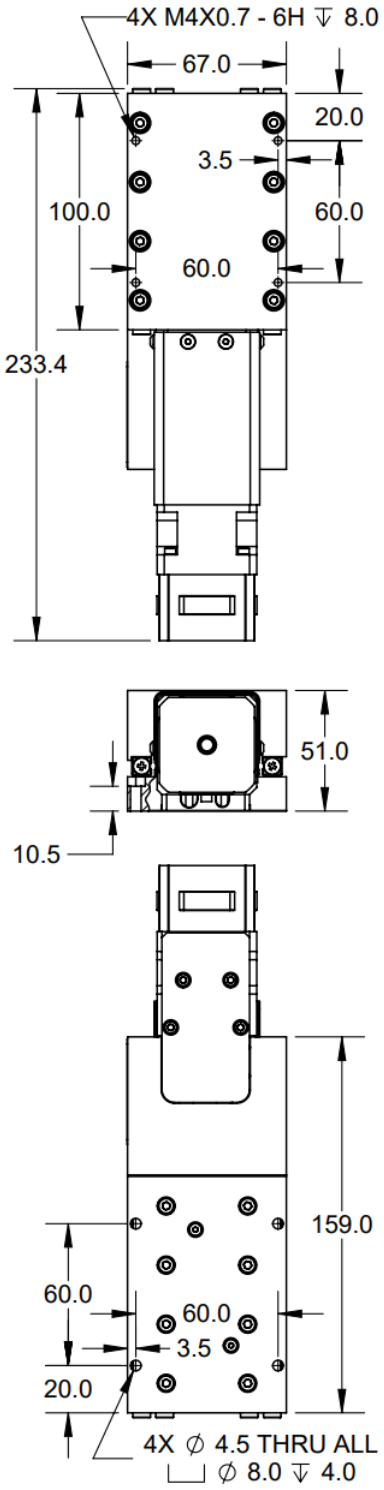

Electrical Pinout

Feedback Connector (DSUB26HD MALE)	
PIN	NAME
1	+5V
2	*
3	*
4	*
5	LIM+
6	*
7	*
8	*
9	*
10	*
11	*
12	*
13	*
14	LIM-
15	*
16	*
17	*
18	*
19	GND
20	*
21	*
22	*
23	HOME
24	*
25	*
26	*
* Reserved	

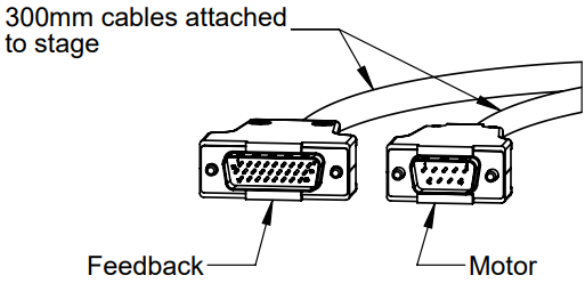

Motor Connector (DSUB9 MALE)	
PIN	NAME
1	*
2	*
3	*
4	*
5	*
6	PHASE A+
7	PHASE A-
8	PHASE B+
9	PHASE B-
* Reserved	

Motor Specifications	
Motor Type	Bipolar Stepper
Current/phase (A)	0.8
Resistance/phase (Ω)	10.0
Induction/phase(mH)	6.9

Feedback Specifications	
Supply Voltage (V)	5.0±10%
Supply Current (mA)	250
Encoder Feedback	No
Limit Switches	Yes
Limit Switch Output Type	CMOS
Limit Switch Output current (mA)	±20.0
Home Switch	Yes
Home Switch Output Type	CMOS
Home Switch Output current (mA)	±20.0

A home switch is provided near center mechanical travel and a limit switch at each end of travel. The limit switches will be pulled low throughout the travel range of the stage. The output will swing high at the end of travel and remain high until the mechanical limit is reached.